REF: PH/AGH/2020-21/447

Date: 7th August 2020

Tender Notification for the procurement of confocal micro Raman Spectrometer compatible with existing Montana cryostation
(Last Date for submission of tenders: 28th August 2020)

Kindly send your best quotation for the following item on C.I.P. Bangalore basis. Your quotation should clearly indicate the terms of delivery, delivery schedule, E.D., payment terms etc. The tender should be submitted in **two separate sealed envelopes** - one containing the technical bid and the other containing the commercial bid, both of which should reach us, duly signed on or before 1700 hours, 28th August 2020.

Please enclose a compliance certificate for all the items including Raman Spectrometer (including gratings, filters, power levels), lasers, microscope and collection accessories, detector, computer hardware and software etc. along with the technical bid. Technical details and other terms and conditions mentioned below.

Yours Sincerely,
Chairman
Department of Physics

Separate labelled and sealed technical and commercial bids should be sent to:

Prof. Arindam Ghosh
Professor
Department of Physics
Indian Institute of Science
Bangalore - 560012, India

Specifications of the product – Confocal micro Raman Spectrometer compatible with existing Montana cryostation: Confocal micro Raman Spectrometer with Photoluminescence facility for single shot Raman/PL as well as mapping. Spectrometer should be inclusive of research grade microscope with objectives, detector, lasers, optics and other necessary accessories, along with computers and software for data acquisition and data analysis. The delivered machine should be fully compatible with low temperature Montana cryostation (model s50) upon installation (Details of the Montana system is attached).

1. **Raman Spectrometer:** Spectrograph equipped with research grade microscope capable of producing Raman Spectra
   - **a.** Range: 50 cm^{-1} to 4000 cm^{-1}(or better)
   - **b.** PL upto 1000 nm (from 532 nm).
   - **c.** Spectral resolution (FWHM): 0.5 cm^{-1} (or better).
   - **d.** Grating should be 2400 gr/mm. It must be controlled through software. Change of gratings if required must be quick and not require realignments.
   - **e.** Raman Filters down to 50cm^{-1} or lower.
   - **f.** Low cut-off Raman filter capable of measuring Raman signal at 10cm-^{1}.
   - **g.** The spectrometer must have a filtering system that can offer choice of step size ~ 0.1mW.

2. **LASER:** Diode Laser 532nm, 30mW or greater.

3. **Microscope:** A high stability research grade microscope.

   - **a.** Microscope should be branded, research grade with colour camera for viewing.
   - **b.** Microscope should be directly coupled to the spectrometer.
   - **c.** Objectives: Suitable objectives of 10X, 20X and 50X Long Working Distance objective (with working distance of 6 mm or greater).
   - **d.** Laser spot size ≤ 1.5 micrometers.
   - **e.** XYZ mapping should be capable (Specify range in technical bid) with resolution of ~ 50 nm in X and Y directions.

4. **Detector:**
   a. A high efficiency CCD detector(s) ready for Raman and PL measurements.
   b. It must have fully automated operation for providing maximal performance.
   c. Should have Quantum efficiency > 50% in the wavelength 800-950 nm and at 400 nm.

5. **Computer and software:** The state-of-the-art computer control system compatible-with and optimized for the application software to perform the various measurement options automatically (language of software: ENGLISH). Vendors to specify the details in technical bid.

6. **Integration with Montana:**
   a. We should be able to perform Raman Spectroscopy and PL along with mapping on sample kept inside the Montana cryostation.
   b. It should be integrable and compatible with Montana cryostation (s50) and should be demonstrated with our Montana system. (Specify the mode of integration in your technical bid).

7. **Arrangement for G2 (g^2) setup:**
   a. It will include a channel to access the reflected light from sample. Vendor to provide necessary details (port, mirrors, beam-splitter etc) in technical bid.

8. **Optional Items:**

1. InGaAs detector for detection in NIR region (upto 1600 nm or better).

Other terms and conditions:

1. Installation and training must be included.
2. Demonstration of Raman/PL mapping of sample kept inside Montana cryostation at base temperature.
3. Demonstration of laser spot size on sample kept inside Montana cryostation.
4. The vendor should have a track record of having previously supplied at least THREE similar equipment in India (please furnish the contact details of the customers).
5. The vendor should have qualified technical service personnel for the equipment based in India (preferably in Bangalore).
6. The payment will be through confirmed irrevocable Letter of Credit.
7. Alternate modes of payment can be suggested with suitable justification.
8. The lead time for the delivery of the equipment should not be more than 6-8 months from the date of receipt of our purchase order.
9. The instrument must carry a comprehensive warranty of 3 year from the date of installation.

Yours sincerely,

Prof. Arindam Ghosh
Professor
Department of Physics
Indian Institute of Science
Bangalore - 560012, India

CR-596 Cryostation s50 (C2)

MONTANA INSTRUMENTS
COLD SCIENCE MADE SIMPLE

- INDIA POWER PLUGS
- 30ft HELIUM HOSES / POWER CABLES
- EXTENDED CROSSLINK
- SAMPLE CHAMBER BASE - TWO SIDE PANEL
- STANDARD PLATFORM
- 100/50 HOUSING, 100mm INSIDE HEIGHT, 4x 50mm WINDOWS
- 50mm HOUSING LID
- STOCK DESIGN SAMPLE MOUNT

ADDITIONAL OPTIONS:

MAGNETO-OPTIC MODULE
16mm Pole Tips
20mm Pole Tips
INTERFACE EXTENSIONS HOUSING (IEH)
QUAD RF (FOUR SMA) SIDE PANEL
DUAL FIBER OPTIC COMPRESSION FEEDTHROUGH SIDE PANEL
MO14 ELECTRICAL SAMPLE MOUNT
R2D12 ELECTRICAL SAMPLE MOUNT
LOW WORKING DISTANCE - CaF2
39mm ID Recessed Objective

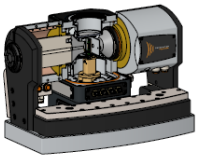

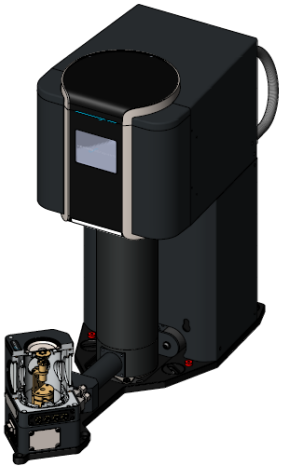

SAMPLE CHAMBER

MONTANA INSTRUMENTS
COLD SCIENCE MADE SIMPLE

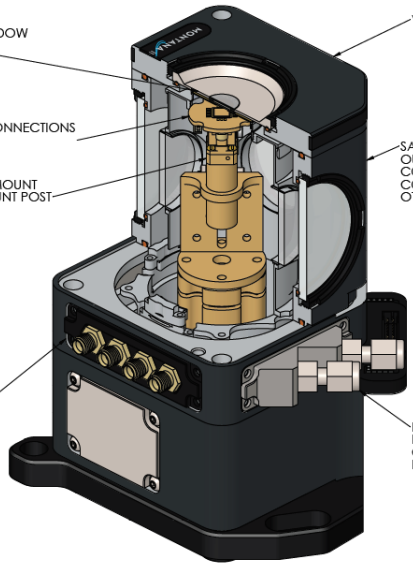

LOW WORKING DISTANCE WINDOW
6mm INNER APERTURE

R2D12 ELECTRICAL SAMPLE MOUNT
12 DC CONNECTIONS AND 2 RF CONNECTIONS
FLEX CIRCUIT TO SIDE PANEL

THERMALLY DAMPED SAMPLE MOUNT
WITH ADJUSTABLE SAMPLE MOUNT POST

R2D12 SIDE PANEL.
MDR-12 CONNECTION TO
FLEX CIRCUIT.
(R2D12 RF CONNECTIONS WILL BE TO
THE QUAD RF PANEL)

QUAD RF SIDE PANEL. SMA CONNECTIONS
ON OUTSIDE. SEMI-RIGID LINES INTO COLD
SPACE WITH SMP CONNECTIONS.
STAYS IN PLACE WITH MAGNETO OPTIC.

VACUUM HOUSING LID.

SAMPLE SPACE HOUSING WITH 50mm
OUTER WINDOWS AND 30mm INNER
COLD WINDOWS. WINDOWS ARE AR
COATED FUSED SILICA UNLESS
OTHERWISE SPECIFIED

DUAL FIBER OPTIC FEEDTHROUGH
PANEL
COMPRESSION STYLE INCLUDES
FERRULES AND TEFLON INSERTS